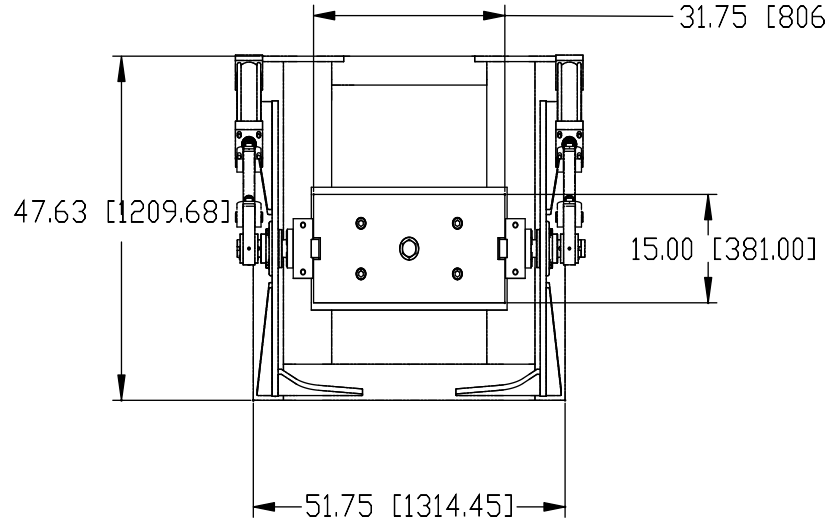

KEY: INCHES [MM]

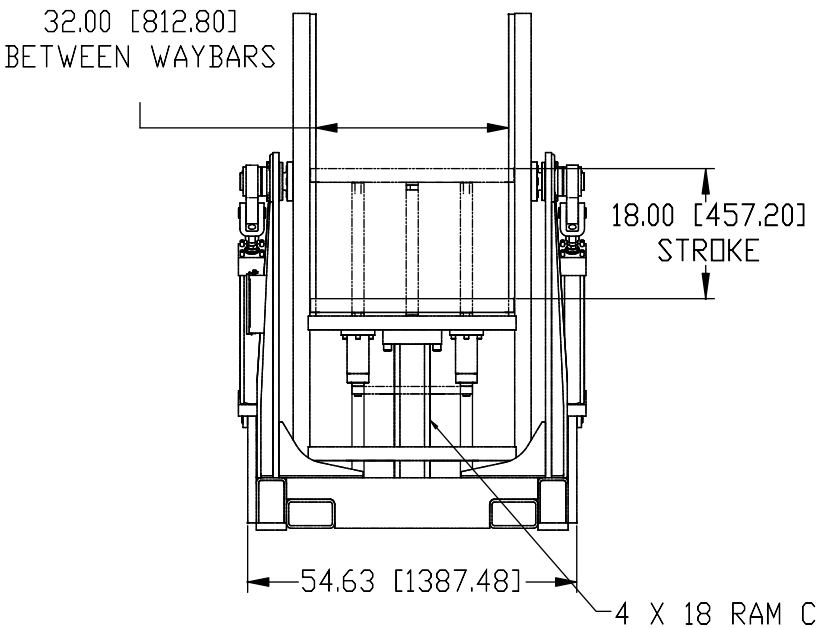

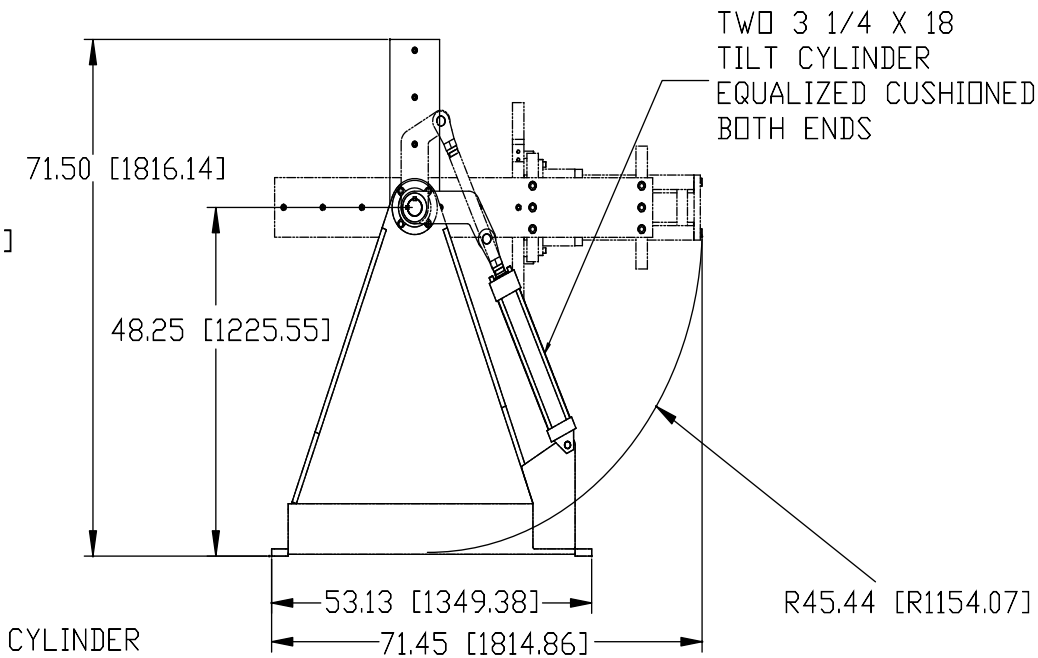

HALL
PERMANENT MOLD MACHINES